HYDAC INTERNATIONAL

Pressure Transmitters for Hydrogen Applications

EN 18.409.0 / 12.20

Pressure Measurement for Hydrogen Applications

HYDAC ELECTRONIC

Development and Production, Saarbrücken

Sensor technology centre, Hermsdorf

HYDAC has been one of the leading suppliers of fluid technologies, hydraulics, cooling equipment and electronics for more than 60 years and has over 9,500 employees worldwide.

The breadth and depth of our product range, combined with our recognised expertise in development, manufacturing, sales and service allows us to provide solutions worldwide for the most diverse challenges, in a wide range of industry sectors.

The product range of HYDAC ELECTRONIC includes sensors, measurement equipment and control technologies.
This sensor range comprises of products for the measurement of pressure, temperature, distance, angle, inclination, position, level, flow rate and speed, as well as contamination and oil condition.
Beyond the standard range, products are available for specialist applications such as devices for explosive atmospheres or applications with increased functional safety requirements.
In the automation segment, our portfolio ranges from products for mobile machines such as controllers, IO expansion modules and displays, as well as solutions for internal and remote data communication for mobile machine systems, through to cloud solutions.

Almost all these products are developed, manufactured and marketed by HYDAC ELECTRONIC. Application suitability is proven and tested on self-developed HYDAC test benches. With its high quality standards, HYDAC ELECTRONIC maintains the demanding requirements for product quality.

For more than 40 years, HYDAC ELECTRONIC has developed and manufactured pressure transmitters for industrial and mobile applications.

The pressure transmitter series for hydrogen applications represents the latest innovation within our existing product range.
These devices are based on a robust and long-life thin-film sensor cell, which is welded onto the process connection eliminating the requirement for seals within the fluid port connection. All parts in contact with the hydrogen are constructed out of specifically approved stainless steel.

Stationary applications

For the use in industrial hydrogen applications such as hydrogen compressors, dispensers etc., HYDAC now offers a range of **pressure transmitters from the HDA 4400 series**, with approvals for hydrogen applications in explosive atmospheres. The combination of a variety of approvals enables universal, almost worldwide use of this product range.

A double-approval version with ATEX and IECEx has been developed with the ignition protection types “intrinsically safe” and “non-incendive”. These devices are also available as a redundant version for implementing into systems requiring increased functional safety.

The transmitters with the ignition protection type “flameproof enclosure” combine ATEX and IECEx certification as well as cCSAus certification, which is especially for the North American market. Additionally, a cCSAus approval version is also available with ignition protection types “intrinsically safe” and “non-incendive”.

Mobile applications

The **pressure transmitter series HDA 8400** has been developed for the use in mobile applications, i.e. for the application in fuel cell electric vehicles such as automobiles, trucks and buses etc.

The devices are certified according to the type approval regulations EC 79/2009, for hydrogen-driven vehicles. For optimal integration into the respective applications, a variety of hydrogen-approved process connectors have been included in the certification.
For the integration into modern controllers, standard analogue output signals are available for 4..20 mA, 0.5..4.5 V or 1..5 V. Ratiometric output signals are also available.

A large variety of integrated connectors and diverse cable solutions common to mobile applications are available for the electrical connection.

EN 18.409.0/12.20

Pressure transmitters

Type	Approval	Ignition protection type	Area of application	Page
HDA 4400 	ATEX, IECEx	Intrinsically safe; non-sparking	Stationary	5
HDA 4400 redundant 	ATEX, IECEx	Intrinsically safe; non-sparking	Stationary	9
HDA 4400 	cCSAus	Intrinsically safe; non-incendive	Stationary	13
HDA 4400 	ATEX, IECEx, cCSAus	Flameproof enclosure	Stationary	17
HDA 8400 	EC 79/2009		Mobile	23

Notes

HYDAC INTERNATIONAL

Pressure transmitter
HDA 4400

Hydrogen, Ex applications
ATEX, IECEx, dual approval
Intrinsically safe, Non-sparking

Relative pressure	Accuracy 0.5 %

Features

- Specially designed for the measurement of hydrogen
- Parts in contact with the fluid: 1.4435 with a Ni content ≥ 13 % (316L)
- ATEX, IECEx, dual approval
- Ignition protection type: Intrinsically safe, Non-sparking

Description

The pressure transmitter series HDA 4400 has been specially developed for measuring tasks with hydrogen. The transmitters are based on a robust, long-life sensor cell with a thin-film strain gauge on a stainless steel membrane. The sensor cell is welded to the process connection, there are no internal seals. The compatibility with hydrogen is ensured by using a particular material. All hydrogen-wetted parts are made of stainless steel 1.4435 with a Ni content of ≥ 13 %.

The pressure transmitters are applicable in potentially explosive atmospheres, and for this purpose, they are approved for the ignition protection types "intrinsically safe" and "non-sparking" according to ATEX and IECEx.

Application fields

The applications can be found throughout the hydrogen cycle, beginning with systems for hydrogen production (i.e. electrolysers) through to systems for hydrogen fueling stations, but also in test stands for hydrogen system components etc.

ATEX	I M2	Ex ia I Ma
	II 1G	Ex ia IIC T6 Ga
	II 1/2G	Ex ia IIC T6 Ga/Gb
	II 2G	Ex ia IIC T6 Gb
	II 1D	Ex ia IIIC T85 °C Da
	II 3G	Ex nA IIC T6, T5, T4 Gc
	II 3G	Ex ic IIC T6, T5, T4 Gc
	II 3D	Ex ic IIIC T80 °C, T90 °C, T100 °C Dc
IECEx		Ex ia I Ma
		Ex ia IIC T6 Ga
		Ex ia IIC T6 Ga/Gb
		Ex ia IIC T6 Gb
		Ex ia IIIC T85 °C Da
		Ex nA IIC T6, T5, T4 Gc
		Ex ic IIC T6, T5, T4 Gc
		Ex ic IIIC T80 °C, T90 °C, T100 °C Dc

Technical details

Input data												
Measuring ranges	bar	16	25	40	60	100	200	250	400	500	600	1050
Overload pressures	bar	50	50	80	120	200	500	500	800	1000	1000	1400
Burst pressure	bar	125	125	200	300	500	1250	1250	2000	3000	3000	3000
Mechanical connection (Tightening torque, recommended)					SF250CX20, Autoclave (7/16-20 UNF 2B) (15 Nm for measuring range ≤ 600 bar; 20 Nm for measuring range 1050 bar) G 1/4 B DIN EN 837 (20 Nm for measuring range ≤ 600 bar; 40 Nm for measuring range 1050 bar)							
Parts in contact with the fluid					Stainless steel		1.4435 (Ni content ≥ 13 %)					
					Measurement cell		gold-plated					
					Seal		Copper (Cu-DHP) (G 1/4 B)					

Output data		
Output signal, permitted load resistance	4 .. 20 mA, 2-conductor, R_{Lmax} (U_B – 12 V) / 20 mA [kΩ]	
Accuracy acc. to DIN 16086, terminal based	≤ ± 0.5 % FS typ. ≤ ± 1 % FS max.	
Accuracy, B.F.S.L	≤ ± 0.25 % FS typ. ≤ ± 0.5 % FS max.	
Temperature compensation zero point	≤ ± 0.015 % FS / °C typ. ≤ ± 0.025 % FS / °C max.	
Temperature compensation span	≤ ± 0.015 % FS / °C typ. ≤ ± 0.025 % FS / °C max.	
Non-linearity acc. to DIN 16086, terminal based	≤ ± 0.3 % FS max.	
Hysteresis	≤ ± 0.4 % FS max.	
Repeatability	≤ ± 0.1 % FS	
Rise time	≤ 2 ms	
Long-term drift	≤ ± 0.3 % FS typ. / year	
Environmental conditions		
Compensated temperature range	-25 .. +85 °C	
Operation / ambient / fluid temperature range[1)]	T6, T80/T85 °C	Ta = -40 to +60 °C
	T5, T90 °C	Ta = -40 to +70 °C
	T100 °C	Ta = -40 to +80 °C
	T4	Ta = -40 to +85 °C
Storage temperature range	-40 .. +100 °C	
CE mark	EN 61006-6-1 / 2 / 3 / 4; EN 60079-0 / 11 / 15 / 26; EN 50303	
Vibration resistance to DIN EN 60068-2-6 at 10 .. 500 Hz	≤ 20 g	
Protection type to DIN EN 60529 [2)]	IP 67	
Relevant data for Ex applications	**Ex ia, ic**	**Ex nA**
Supply voltage	12 ..28 V DC	12 ..28 V DC
Max. input current	Ii = 100 mA	
Maximum input power	Pi = 1 W	max. power consuption ≤ 1 W
Connection capacitance of the sensor	Ci ≤ 22 nF	
Inductance of the sensor	Li = 0 mH	
Insulation voltage	50 V AC, with integrated overvoltage protection to EN 61000-6-2	
Other data		
Residual ripple of supply voltage	≤ 5 %	
Current consumption	≤ 25 mA	
Life expectancy	> 10 million load cycles (0 .. 100 % FS)	
Weight	~ 150 g	

Note: Reverse polarity protection of the supply voltage, overvoltage, override and short circuit protection are provided.

FS (**F**ull **S**cale) = relative to complete measuring range

B.F.S.L. = **B**est **F**it **S**traight **L**ine

1) For instruments with an M12x1 connector the temperature at the electrical connection may not be lower than -25 °C.

2) With mounted mating connector in corresponding protection type

Dimensions

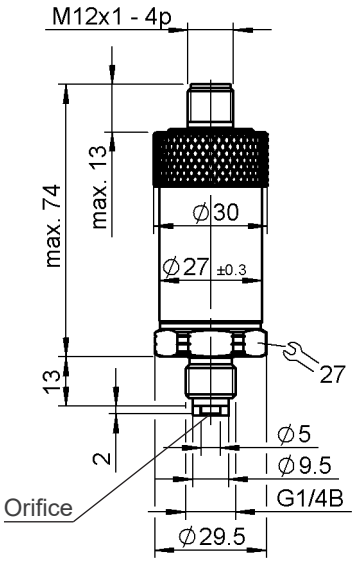

Electrical Connection Variants		Mechanical Connection Variants
Male connector EN175301-803, 3 pole + PE	Related mating connector ZBE01 (included in delivery)	SF250CX20 Autoclave (7/16-20 UNF 2B female thread)
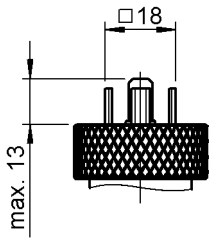	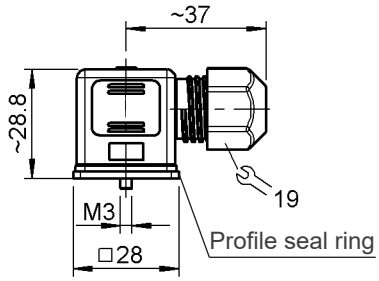	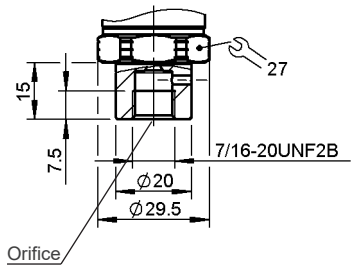

With impact protection metal safety sleeve:
Protection types and applications (code): 9

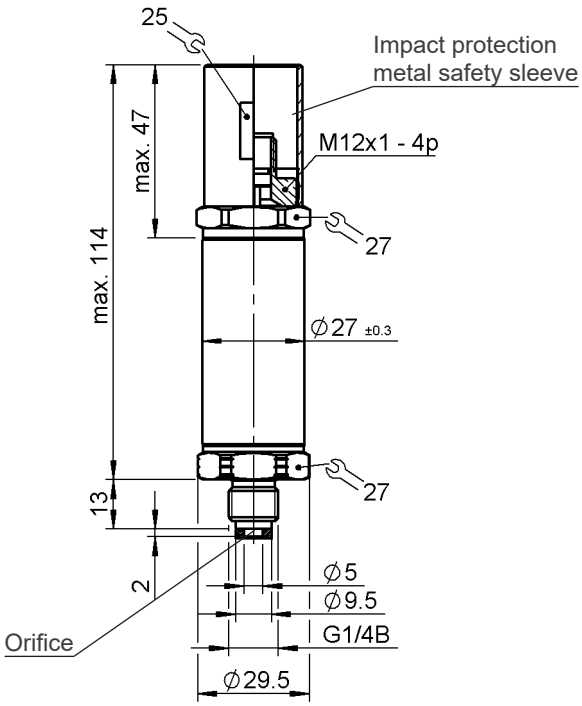

The impact protection metal safety sleeve is included in delivery. A straight mating connector is required for electrical connection.
E.g. mating connector M12x1, 4 pole, straight, with 3 m shielded cable: ZBE 06S-03, Part.no. 6098243

Pin connections

M12x1, 4 pole	Pin	Output signal: A
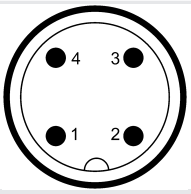	1	Signal +
	2	n.c.
	3	Signal -
	4	n.c.

EN 175301-803, 3 pole + PE	Pin	Output signal: A
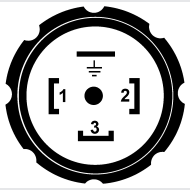	1	Signal +
	2	Signal -
	3	n.c.
	⊥	Housing

Model code

HDA 4 4X X - A - XXXX - E N X - H00

Mechanical connection
C = SF250CX20, Autoclave (7/16-20 UNF 2B)
G = G1/4 B DIN EN 837

Electrical connection
5 = Male connector EN 175301-803, 3 pole + PE (IP 67 mating connector included)
6 = Male connector M12X1, 4 pole (mating connector not included)

Output signal
A = 4 .. 20 mA, 2 -conductor

Measuring ranges in bar
0016; 0025; 0040; 0060; 0100; 0200; 0250; 0400; 0500; 0600; 1050

Approval
E = ATEX; IECEx

Insulation voltage
N = 50 V AC to housing

Protection types and application fields (code)
(see table below)

Modification number
H00 = for hydrogen applications

Code no. - Model Code	ATEX KEMA 05 ATEX 1016X	IECEx KEM 08.0014X	Application fields	Electrical connection (see model code)
1 =	I M1 Ex ia I Ma	Ex ia I Ma	Mining protection type: intrinsically safe ia with barrier	5, 6
	II 1G Ex ia IIC T6 Ga II 1/2G Ex ia IIC T6 Ga/Gb II 2G Ex ia IIC T6 Gb II 1D Ex ia IIIC T85 °C Da	Ex ia IIC T6 Ga Ex ia IIC T6 Ga/Gb Ex ia IIC T6 Gb Ex ia IIIC T85 °C Da	Gases / conductive dusts protection type: intrinsically safe ia with barrier	
9 [1] **=**	II 3G Ex nA IIC T6,T5 Gc	Ex nA IIC T6,T5 Gc	Gases protection type: non-sparking nA	6
C =	II 3G Ex ic IIC T6,T5 Gc II 3D Ex ic IIIC T80 °C, T90 °C Dc	Ex ic IIC T6,T5 Gc Ex ic IIIC T80 °C, T90 °C Dc	Gases / conductive dusts protection type: intrinsically safe ic with barrier	5, 6

Note:
[1] Only in conjunction with electric output "6" and the impact protection metal safety sleeve (see also dimensions).
Devices for other protection types are available on request.

Note

The information in this brochure relates to the operating conditions and applications described.
For applications or operating conditions not described, please contact the relevant technical department.
Subject to technical modifications.

HYDAC ELECTRONIC GMBH
Hauptstraße 27
66128 Saarbrücken/Germany
Telephone +49 (0)6897 509-01
Fax +49 (0)6897 509-1726
E-mail: electronic@hydac.com
Internet: www.hydac.com

HYDAC INTERNATIONAL

Pressure transmitter

HDA 4400

Hydrogen, Ex applications
ATEX, IECEx, dual approval
Intrinsically safe, Non-sparking
Redundant

Relative pressure	Accuracy 0.5 %

Features

- Redundant design
- Specially designed for the measurement of hydrogen
- Parts in contact with the fluid: 1.4435 with a Ni content ≥ 13 % (316L)
- ATEX, IECEx, dual approval
- Ignition protection type: Intrinsically safe, Non-sparking

Description

The redundant version of the pressure transmitter series HDA 4400 has been specially developed for measuring tasks with hydrogen. Thanks to the use of two highly accurate and robust stainless steel sensor cells with thin-film strain gauge, each with their own electronics unit, the device has a fully redundant architecture and, thus, two separate and independent output signals. The sensor cell is welded to the process connection, there are no internal seals. The compatibility with hydrogen is ensured by using a particular material. All hydrogen-wetted parts are made of stainless steel 1.4435 with a Ni content of ≥ 13 %.

The pressure transmitters are applicable in potentially explosive atmospheres, and for this purpose, they are approved for the ignition protection types "intrinsically safe" and "non-sparking" according to ATEX and IECEx.

Application fields

Thanks to its redundant design, the device is ideally suited for the use in systems with increased functional safety requirements. The applications can be found throughout the hydrogen cycle, beginning with systems for hydrogen production (i.e. electrolysers) through to systems for hydrogen fueling stations, but also in test stands for hydrogen system components etc.

ATEX	I M2	Ex ia I Ma
	II 1G	Ex ia IIC T6,T5 Ga
	II 1/2G	Ex ia IIC T6,T5 Ga/Gb
	II 2G	Ex ia IIC T6,T5 Gb
	II 1D	Ex ia IIIC T85 °C, T95 °C Da
	II 3G	Ex nA IIC T6, T5, T4 Gc
	II 3G	Ex ic IIC T6, T5, T4 Gc
	II 3D	Ex ic IIIC T85 °C, T95 °C, T105 °C Dc
IECEx		Ex ia I Ma
		Ex ia IIC T6,T5 Ga
		Ex ia IIC T6,T5 Ga/Gb
		Ex ia IIC T6,T5 Gb
		Ex ia IIIC T85 °C, T95 °C Da
		Ex nA IIC T6, T5, T4 Gc
		Ex ic IIC T6, T5, T4 Gc
		Ex ic IIIC T85 °C, T95 °C, T105 °C Dc

Technical details

Input data												
Measuring ranges signal 1	bar	16	25	40	60	100	200	250	400	500	600	1050
Measuring ranges signal 2	bar	16	25	40	60	100	200	250	400	500	600	1050
Overload pressures	bar	50	50	80	120	200	500	500	800	1000	1000	1400
Burst pressure	bar	125	125	200	300	500	1250	1250	2000	3000	3000	3000
Mechanical connection (Tightening torque, recommended)					SF250CX20, Autoclave (7/16-20 UNF 2B) (15 Nm for measuring range ≤ 600 bar; 20 Nm for measuring range 1050 bar)							
Parts in contact with the fluid					Stainless steel		1.4435 (Ni content ≥ 13 %)					
					Measurement cell		gold-plated					

Output data		
Output signal 1 Output signal 2 Permitted load resistance, each	4 .. 20 mA, 2-conductor 20 .. 4 mA, 2-conductor, R_{Lmax} (U_B – 12 V) / 20 mA [kΩ]	
Accuracy acc. to DIN 16086, terminal based	≤ ± 0.5 % FS typ. ≤ ± 1 % FS max.	
Accuracy, B.F.S.L	≤ ± 0.25 % FS typ. ≤ ± 0.5 % FS max.	
Temperature compensation zero point	≤ ± 0.015 % FS / °C typ. ≤ ± 0.025 % FS / °C max.	
Temperature compensation span	≤ ± 0.015 % FS / °C typ. ≤ ± 0.025 % FS / °C max.	
Non-linearity acc. to DIN 16086, terminal based	≤ ± 0.3 % FS max.	
Hysteresis	≤ ± 0.4 % FS max.	
Repeatability	≤ ± 0.1 % FS	
Rise time	≤ 2 ms	
Long-term drift	≤ ± 0.3 % FS typ. / year	
Environmental conditions		
Compensated temperature range	-25 .. +85 °C	
Operation / ambient / fluid temperature range[1]	T6, T85 °C	Ta = -40 to +60 °C
	T5, T95 °C	Ta = -40 to +70 °C
	T105 °C	Ta = -40 to +80 °C
	T4	Ta = -40 to +85 °C
Storage temperature range	-40 .. +100 °C	
CE marking	EN 61006-6-1 / 2 / 3 / 4; EN 60079-0 / 11 / 15 / 26; EN 50303	
Vibration resistance to DIN EN 60068-2-6 at 10 .. 500 Hz	≤ 20 g	
protection type to DIN EN 60529 [2]	IP 67	

Relevant data for Ex applications	Ex ia, ic	Ex nA
Supply voltage	12 ..28 V DC	12 ..28 V DC
Max. input current	Ii = 100 mA	
Maximum input power	Pi = 0.7 W	max. power consuption ≤ 1 W
Connection capacitance of the sensor	Ci ≤ 22 nF	
Inductance of the sensor	Li = 0 mH	
Intrinsic safety barrier	2-channel, R_{min} = 280 Ω (e.g. Pepperl & Fuchs Z789)	
Insulation voltage	50 V AC, with integrated overvoltage protection to EN 61000-6-2	

Other data	
Residual ripple of supply voltage	≤ 5 %
Current consumption	≤ 25 mA
Life expectancy	> 10 million load cycles (0 .. 100 % FS)
Weight	~ 210 g

Note: Reverse polarity protection of the supply voltage, overvoltage, override and short circuit protection are provided.

FS (**F**ull **S**cale) = relative to complete measuring range

B.F.S.L. = **B**est **F**it **S**traight **L**ine

[1] For instruments with an M12x1 connector the temperature at the electrical connection may not be lower than -25 °C.

[2] With mounted mating connector in corresponding protection type

Dimensions

Version as ignition protection type "intrinsically safe" (Ex ia, Ex ic)

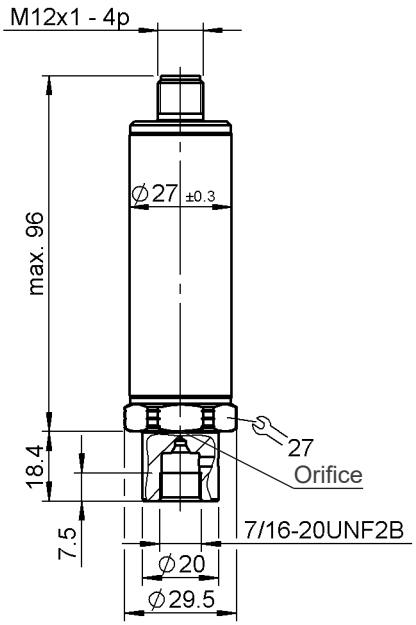

Version as ignition protection type "non-sparking" (Ex nA) with impact protection metal safety sleeve

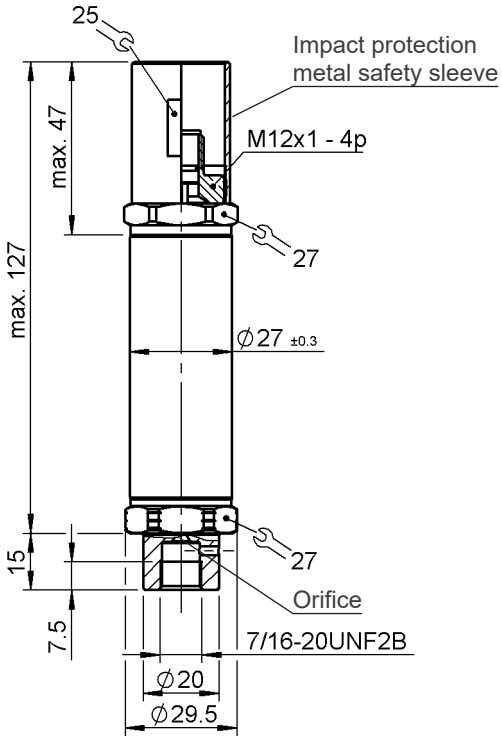

The impact protection metal safety sleeve is included in delivery. A straight mating connector is required for electrical connection. E.g. mating connector M12x1, 4 pole, straight, with 3 m shielded cable: ZBE 06S-03, Part.no. 6098243

Pin connections

M12x1, 4 pole	Pin	Output signal: AA
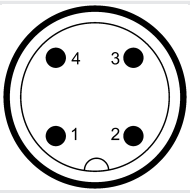	1	+ Signal 1
	2	- Signal 1
	3	+ Signal 2
	4	- Signal 2

Model code

HDA 4 4X X - AA - XXXX - XXXX - E N X - H00

Mechanical connection
C = SF250CX20, Autoclave (7/16-20 UNF 2B)

Electrical connection
6 = Male connector M12X1, 4 pole (mating connector not included)

Output signal
AA = Signal 1: 4 .. 20 mA, 2 conductor
Signal 2: 20 .. 4 mA, 2 conductor

Measuring ranges in bar (output signal 1)
0016; 0025; 0040; 0060; 0100; 0200; 0250; 0400; 0500; 0600; 1050

Measuring ranges in bar (output signal 2)
0016; 0025; 0040; 0060; 0100; 0200; 0250; 0400; 0500; 0600; 1050

Approval
E = ATEX; IECEx

Insulation voltage
N = 50 V AC to housing

Protection types and application fields (code)
(see table below)

Modification number
H00 = for hydrogen applications

Code no. - Model Code	ATEX KEMA 05 ATEX 1016X	IECEx KEM 08.0014X	Application fields
1 =	I M1 Ex ia I Ma	Ex ia I Ma	Mining protection type: intrinsically safe ia with barrier
	II 1G Ex ia IIC T6, T5 Ga II 1/2G Ex ia IIC T6, T5 Ga/Gb II 2G Ex ia IIC T6, T5 Gb II 1D Ex ia IIIC T85 °C, T95 °C Da	Ex ia IIC T6, T5 Ga Ex ia IIC T6, T5 Ga/Gb Ex ia IIC T6, T5 Gb Ex ia IIIC T85 °C, T95 °C Da	Gases / conductive dusts protection type: intrinsically safe ia with barrier
9 =	II 3G Ex nA IIC T6,T5 Gc	Ex nA IIC T6,T5 Gc	Gases protection type: non-sparking nA
C =	II 3G Ex ic IIC T6,T5 Gc II 3D Ex ic IIIC T85 °C, T95 °C Dc	Ex ic IIC T6,T5 Gc Ex ic IIIC T85 °C, T95 °C Dc	Gases / conductive dusts protection type: intrinsically safe ic with barrier

Note:
Instruments for other protection types and application fields are available upon request.

Note

The information in this brochure relates to the operating conditions and applications described.
For applications or operating conditions not described, please contact the relevant technical department.
Subject to technical modifications.

HYDAC ELECTRONIC GMBH
Hauptstraße 27
66128 Saarbrücken/Germany
Telephone +49 (0)6897 509-01
Fax +49 (0)6897 509-1726
E-mail: electronic@hydac.com
Internet: www.hydac.com

HYDAC INTERNATIONAL

Pressure transmitter
HDA 4400

Hydrogen, Ex applications
CSA Approval
Intrinsically safe, Non incendive

Relative pressure	Accuracy 0.5 %

C US

Features

- Specially designed for the measurement of hydrogen
- Parts in contact with the fluid: 1.4435 with a Ni content ≥ 13 % (316L)
- $_{C}CSA_{US}$ Approval for Canada and USA
- Ignition protection type: Intrinsically safe, Non-incendive

Description

The pressure transmitter series HDA 4400 has been specially developed for measuring tasks with hydrogen. The transmitters are based on a robust, long-life sensor cell with a thin-film strain gauge on a stainless steel membrane. The sensor cell is welded to the process connection, there are no internal seals. The compatibility with hydrogen is ensured by using a particular material. All hydrogen-wetted parts are made of stainless steel 1.4435 with a Ni content of ≥ 13 %.

The pressure transmitters are applicable in potentially explosive atmospheres, and for this purpose, they are available as ignition protection types "intrinsically safe" and "non-incendive" approved for the use on the North American market.

Application fields

The applications can be found throughout the hydrogen cycle, beginning with systems for hydrogen production (i.e. electrolysers) through to systems for hydrogen fueling stations, but also in test stands for hydrogen system components etc.

Intrinsically safe

Class I	Division 1	Group A, B, C, D T6	[C, US]
Class II	Division 1	Group E, F, G	[C, US]
Class III			[C, US]
Class I	Zone 0	AEx ia IIC T6 Ga	[US]
		Ex ia IIC T6 Ga	[C]
	Zone 20	AEx ia IIIC T85 °C Da	[US]
		Ex ia IIIC T85 °C Da	[C]

Non incendive

Class I	Division 2	Group A, B, C, D, T6, T5, T4	[C, US]
Class II	Division 2	Group F, G	[C, US]
Class III			[C, US]
Class I	Zone 2	AEx ic IIC T6, T5, T4 Gc	[US]
		Ex ic IIC T6, T5, T4 Gc	[C]
	Zone 2	AEx nA IIC T6, T5, T4 Gc	[US]
		Ex nA IIC T6, T5, T4 Gc	[C]
	Zone 22	AEx tc IIIB T80 °C, T90 °C, T100 °C Dc	[US]
		Ex tc IIIB T80 °C, T90 °C, T100 °C Dc	[C]

Technical Data

Input data												
Measuring ranges [1]	bar	16	25	40	60	100	200	250	400	500	600	1050
Overload pressures	bar	50	50	80	120	200	500	500	800	1000	1000	1400
Burst pressure	bar	125	125	200	300	500	1250	1250	2000	3000	3000	3000
Mechanical connection (Tightening torque, recommended)	SF250CX20, Autoclave (7/16-20 UNF 2B) (15 Nm for measuring range ≤ 600 bar; 20 Nm for measuring range 1050 bar) G 1/4 B DIN EN 837 (20 Nm for measuring range ≤ 600 bar; 40 Nm for measuring range 1050 bar)											
Parts in contact with the fluid	Stainless steel	1.4435 (Ni content ≥ 13 %)										
	Measurement cell	Additionally gold-plated										
	Seal	Copper (Cu-DHP) (G 1/4 B)										

Output data	
Output signal, permitted load resistance	4 .. 20 mA, 2-conductor, R_{Lmax} (U_B – 12 V) / 20 mA [kΩ]
Accuracy acc. to DIN 16086, terminal based	≤ ± 0.5 % FS typ. ≤ ± 1 % FS max.
Accuracy, B.F.S.L	≤ ± 0.25 % FS typ. ≤ ± 0.5 % FS max.
Temperature compensation zero point	≤ ± 0.015 % FS / °C typ. ≤ ± 0.025 % FS / °C max.
Temperature compensation span	≤ ± 0.015 % FS / °C typ. ≤ ± 0.025 % FS / °C max.
Non-linearity acc. to DIN 16086, terminal based	≤ ± 0.3 % FS max.
Hysteresis	≤ ± 0.4 % FS max.
Repeatability	≤ ± 0.1 % FS
Rise time	≤ 2 ms
Long-term drift	≤ ± 0.3 % FS typ. / year

Environmental conditions		
Compensated temperature range	-25 .. +85 °C	
Operation / ambient / fluid temperature range[2) 3)]	T6, T80/T85 °C	Ta = -40 to +60 °C
	T5, T90 °C	Ta = -40 to +70°C
	T100 °C	Ta = -40 to +80 °C
	T4	Ta = -40 to +85 °C
Storage temperature range	-40 .. +100 °C	
Vibration resistance to DIN EN 60068-2-6 at 10 .. 500 Hz	≤ 10 g (1/2-14 NPT Conduit) ≤ 20 g (male connector)	
Protection type — DIN EN 60529 [4] ISO 20653	IP 67 (male connector) IP6K9K (1/2-14 NPT Conduit)	

Relevant data for Ex applications	Ex ia	Ex ic	Ex nA, Ex tc
Supply voltage	12 ..28 V DC	12 ..28 V DC	12 ..28 V DC
Max. input current	Ii = 100 mA		
Maximum input power	Pi = 1 W		
Connection capacitance of the sensor	Ci ≤ 22 nF	Ci ≤ 22 nF	
Inductance of the sensor	Li = 0 mH	Li = 0 mH	
Insulation voltage	50 V AC, with integrated overvoltage protection		

Other data	
Residual ripple of supply voltage	≤ 5 %
Current consumption	≤ 25 mA
Life expectancy	> 10 million load cycles (0 .. 100 % FS)
Weight	~ 150 g; ~ 300 g (1/2-14 NPT Conduit)

Note: Reverse polarity protection of the supply voltage, overvoltage, override and short circuit protection are provided.

FS (**F**ull **S**cale) = relative to complete measuring range

B.F.S.L. = **B**est **F**it **S**traight **L**ine

[1] psi measuring ranges on request

[2] For instruments with an M12x1 connector the temperature at the electrical connection may not be lower than -25 °C.

[3] With electrical connection M12x1 and EN 175301-803, max. Ta = +70 °C

[4] With mounted mating connector in corresponding protection type

Dimensions

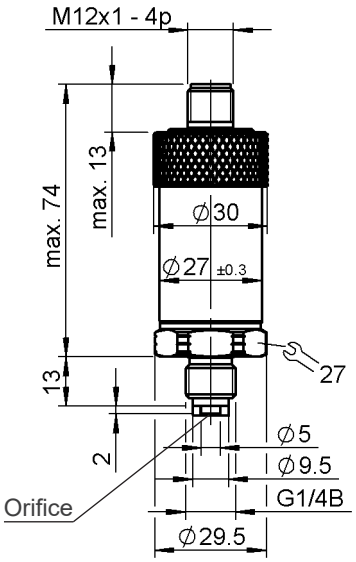

Electrical Connection Variants		Mechanical Connection Variants
Male connector EN175301-803, 3 pole + PE	Related mating connector ZBE01 included in delivery	SF250CX20 Autoclave (7/16-20 UNF 2B female thread)

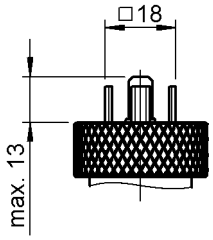

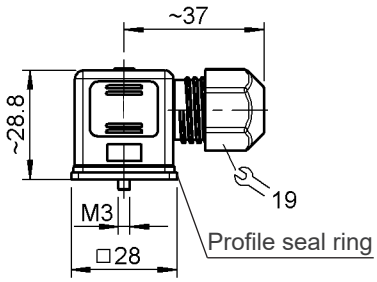

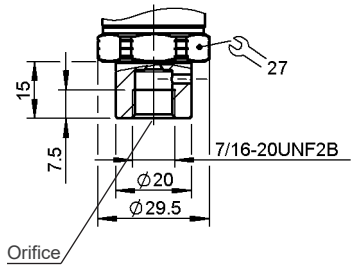

Pin connections

M12x1, 4 pole	Pin	Output signal: A
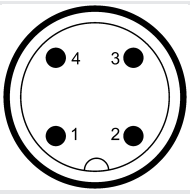	1	Signal +
	2	n.c.
	3	Signal -
	4	n.c.

EN 175301-803, 3 pole+PE	Pin	Output signal: A
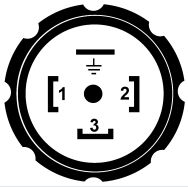	1	Signal +
	2	Signal -
	3	n.c.
	⊥	Housing

9 = 1/2-14 NPT conduit, single leads	Lead	Output signal: A
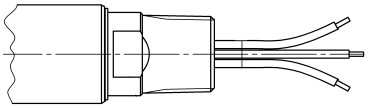	Green	Signal +
	White	Signal -
	Green-yellow	Housing

Model code

HDA 4 4X X - A - XXXX - C N X - H00 (2m)

Mechanical connection
C = SF250CX20, Autoclave (7/16-20 UNF 2B)
G = G1/4 B DIN EN 837

Electrical connection
5 = Male connector EN 175301-803, 3 pole + PE (IP 67 mating connector included)
6 = Male connector M12X1, 4 pole (mating connector not included)
9 = 1/2-14 NPT conduit connector, single leads

Output signal
A = 4 .. 20 mA, 2 connector

Measuring ranges in bar
0016; 0025; 0040; 0060; 0100; 0200; 0250; 0400; 0500; 0600; 1050

Approval
C = CSA

Insulation voltage
N = 50 V AC to housing

Protection types and application fields (code)
(see following table)

Modification number
H00 = for hydrogen applications

Cable length (for Conduit connection only, not applicable for device connectors)
Standard = 2 m

Code no. Model code	CSA certificate number 1760344	Protection types and application fields	Electrical connection (see model code)
A =	Class I Division 1 Group A, B, C, D T6 Class II Division 1 Group E, F, G Class III Class I Zone 0 AEx ia IIC T6 Ga Ex ia IIC T6 Ga Zone 20 AEx ia IIIC T85 °C Da Ex ia IIIC T85 °C Da	Intrinsically Safe Gases and Dusts	9
B =	Class I Division 1 Group A, B, C, D T6 Class I Zone 0 AEx ia IIC T6 Ga Ex ia IIC T6 Ga	Intrinsically Safe Gases	5;6;9
	Class I Division 2 Group A, B, C, D, T6, T5, T4 Class I Zone 2 AEx ic IIC T6, T5, T4 Gc Ex ic IIC T6, T5, T4 Gc	Non incendive with field wiring Gases	
C =	Class I Division 2 Group A, B, C, D, T6, T5, T4 Class II Division 2 Group F, G Class III Class I Zone 2 AEx nA IIC T6, T5, T4 Gc Ex nA IIC T6, T5, T4 Gc Zone 22 AEx tc IIIB T80 °C, T90 °C, T100 °C Dc Ex tc IIIB T80 °C, T90 °C, T100 °C Dc	Non incendive Gases and dusts	9

Note

The information in this brochure relates to the operating conditions and applications described.
For applications or operating conditions not described, please contact the relevant technical department.
Subject to technical modifications.

HYDAC ELECTRONIC GMBH
Hauptstraße 27
66128 Saarbrücken/Germany
Telephone +49 (0)6897 509-01
Fax +49 (0)6897 509-1726
E-mail: electronic@hydac.com
Internet: www.hydac.com

Pressure transmitter
HDA 4400

Hydrogen, Ex applications
ATEX / IECEx / CSA, triple approval
Flameproof enclosure

Relative pressure	Accuracy 0.5 %

Features

- Specially designed for the measurement of hydrogen
- Parts in contact with the fluid: 1.4435 with a Ni content of ≥ 13 % (316L)
- ATEX, IECEx, $_{C}CSA_{US}$ triple approval
- Ignition protection type: Flameproof enclosure

Description

The pressure transmitter series HDA 8400 has been specially developed for measuring tasks with hydrogen. The transmitters are based on a robust, long-life sensor cell with a thin-film strain gauge on a stainless steel membrane. The sensor cell is welded to the process connection, there are no internal seals. The compatibility with hydrogen is ensured by using a particular material. All hydrogen-wetted parts are made of stainless steel 1.4435 with a Ni content of ≥ 13 %.

The transmitters with the ignition protection type "flameproof enclosure" combine ATEX, IECEx and even $_{C}CSA_{US}$ certification, especially for the North American market. This allows universal world wide use of the sensor in potentially explosive atmospheres.

Application fields

The applications can be found throughout the hydrogen cycle, beginning with systems for hydrogen production (i.e. electrolysers) through to systems for hydrogen fueling stations, but also in test stands for hydrogen system components etc.

ATEX
I M2 Ex db I Mb
II 2G Ex db IIC T6, T5 Gb
II 2D Ex tb IIIC T110 °C, T120 °C, T130 °C Db

IECEx
Ex db I Mb
Ex db IIC T6, T5 Gb
Ex tb IIIC T110 °C, T120 °C, T130 °C Db

$_{C}CSA_{US}$
Explosion Proof - Seal not required
Class I Groups A, B, C, D, T6, T5
Class I Zone 1 AEx db IIC T6, T5 Gb [US]
Ex db IIC T6, T5 Gb [C]

Class II Groups E, F, G T110 °C, T120 °C, T130 °C
Zone 21 AEx tb IIIC T110 °C, T120 °C, T130 °C Db [US]
Ex tb IIIC T110 °C, T120 °C, T130 °C Db [C]

Class III

Type 4

Technical Data

Input data												
Measuring ranges [1]	bar	16	25	40	60	100	200	250	400	500	600	1050
Overload pressures	bar	50	50	80	120	200	500	500	800	1000	1000	1400
Burst pressure	bar	125	125	200	300	500	1250	1250	2000	3000	3000	3000
Mechanical connection (Tightening torque, recommended)					SF250CX20, Autoclave (7/16-20 UNF 2B) (15 Nm for measuring range ≤ 600 bar; 20 Nm for measuring range 1050 bar) G 1/4 B DIN EN 837 (20 Nm for measuring range ≤ 600 bar; 40 Nm for measuring range 1050 bar)							
Parts in contact with the fluid					Stainless steel	1.4435 (Ni content ≥ 13 %)						
					Measurement cell	gold-plated						
					Seal	Copper (Cu-DHP) (G 1/4 B)						

Output data	
Output signal, permitted load resistance	4 .. 20 mA, 2-conductor, R_{Lmax} (U_B – 8 V) / 20 mA [kΩ]
Accuracy acc. to DIN 16086, terminal based	≤ ± 0.5% FS typ. ≤ ± 1% FS max.
Accuracy, B.F.S.L	≤ ± 0.25% FS typ. ≤ ± 0.5% FS max.
Temperature compensation zero point	≤ ± 0.015% FS / °C typ. ≤ ± 0.025% FS / °C max.
Temperature compensation span	≤ ± 0.015% FS / °C typ. ≤ ± 0.025% FS / °C max.
Non-linearity acc. to DIN 16086, terminal based	≤ ± 0.3% FS max.
Hysteresis	≤ ± 0.4% FS max.
Repeatability	≤ ± 0.1% FS
Rise time	≤ 2 ms
Long-term drift	≤ ± 0.3% FS typ. / year

Environmental conditions		
Compensated temperature range	-25 .. +85 °C	
Operation / ambient / fluid temperature range[2]	T6, T110 °C T5, T130 °C	Ta = -40 ..+60 °C Ta = -40 ..+80 °C
Storage temperature range	-40 ..+100 °C	
CE mark	EN 61006-6-1 / 2 / 3 / 4; EN 60079-0 / 1 / 31	
Vibration resistance to DIN EN 60068-2-6 at 10 .. 500 Hz	≤ 10 g ≤ 5 g with connection head	
Protection type acc. to DIN EN 60529 [3] acc. to ISO 20653	IP 65 (Vented Gauge), IP 68 (vers. with connection head, seald gauge) IP 69 (Sealed Gauge) IP 6K9K (Sealed Gauge)	

Other data	
Supply voltage [4]	8 .. 30 V DC
Residual ripple of supply voltage	≤ 5 %
Current consumption	≤ 25 mA
Life expectancy	> 10 million load cycles (0 .. 100% FS)
Weight	~ 300 g

Note: Reverse polarity protection of the supply voltage, overvoltage, override and short circuit protection are provided.

FS (**F**ull **S**cale) = relative to complete measuring range

B.F.S.L. = **B**est **F**it **S**traight **L**ine

[1] psi measuring ranges on request

[2] T130 °C only available with electrical connection single leads

[3] For connection head: The cable gland must also meet IP 68 and the 1/2-14 NPT thread of the cable gland has to be sealed by means of a thread sealing compound.

[4] "Limited energy" powered according to CAN/UL 61010 (Clause 9.4), Class 2 UL1310, LPS (CAN/UL 60950)

Dimensions

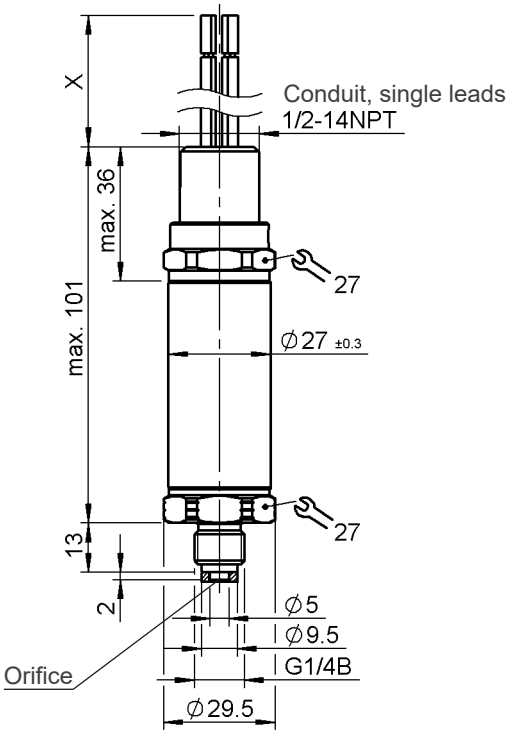

Electrical Connection Variants

1/2-14 NPT Conduit, jacketed cable	M20x1,5 Conduit, single leads
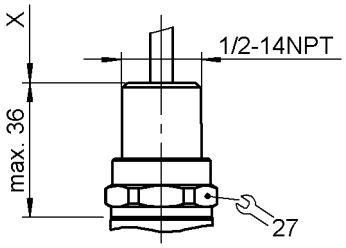	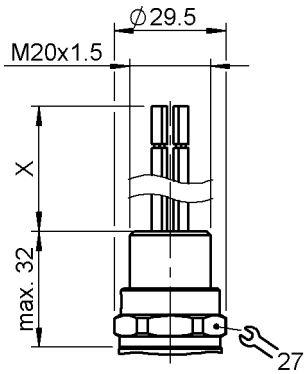

Connection head aluminum

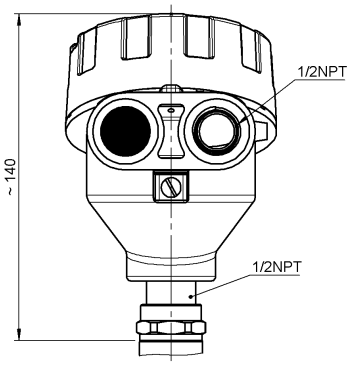

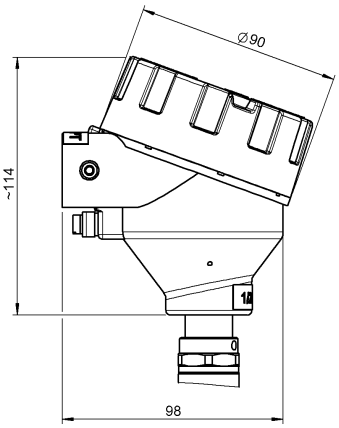

Connection head stainless steel

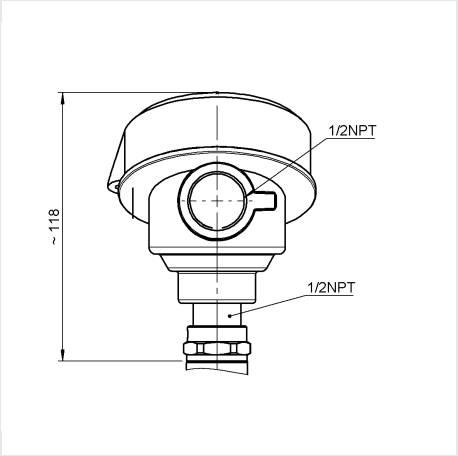

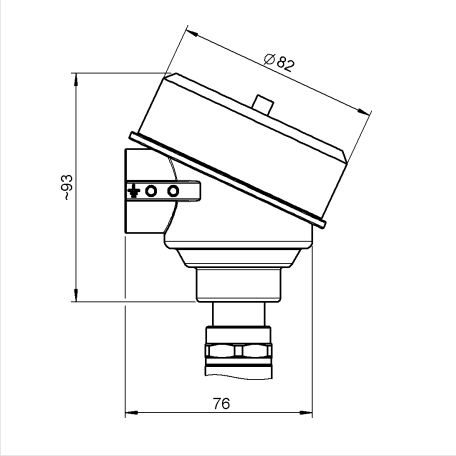

Mechanical Connection Variants

SF250CX20 Autoclave
(7/16-20 UNF 2B female thread)

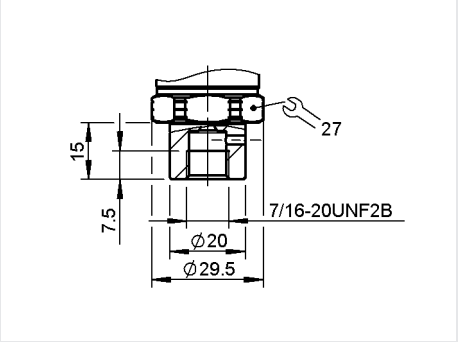

PIN connection

Conduit (single leads)	Lead	Output signal: A
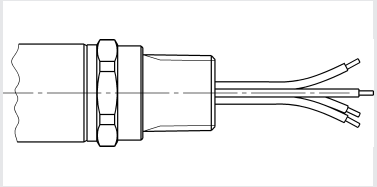	Red	Signal +
	Black	Signal -
	Green-yellow	Housing

Connection head aluminum / stainless steel	Lead	Output signal: A
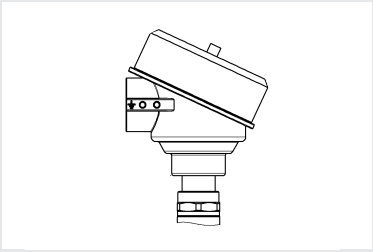	Red	Signal +
	Black	Signal -
	Green-yellow	Housing

Conduit (jacketed cable)	Lead	Output signal: A
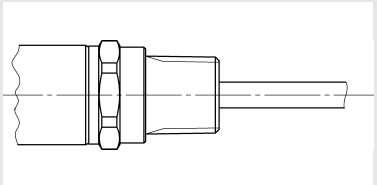	White	Signal -
	Brown	Signal +
	Green	n.c.
	Yellow	n.c.

Model code

HDA 4 4X X - A - XXXX - D X - H00 (2m)

Mechanical connection

C = SF250CX20, Autoclave (7/16-20 UNF 2B)
G = G1/4 B DIN EN 837

Electrical connection (details regarding the fields of application, please see table below)

9 = 1/2-14 NPT conduit (male thread), single leads
G = 1/2-14 NPT conduit (male thread), jacketed cable
J = Connection head (aluminum)
Q = Connection head (stainless steel)
W = M20x1,5 conduit (male thread), single leads

Output signal

A = 4 .. 20 mA, 2 conductor

Measuring ranges in bar

0016; 0025; 0040; 0060; 0100; 0200; 0250; 0400; 0500; 0600; 1050

Approval

D = ATEX Flame Proof
IECEx Flame Proof
CSA Explosion Proof (seal not required)

Measurement cell type

S = Sealed Gauge (sealed to atmosphere) ≥ 40 bar
V = Vented Gauge (vented to atmosphere) < 40 bar

Modification number

H00 = for hydrogen applications

Cable length

Standard = 2 m

Fields of application for the individual electrical connections

	ATEX	IECEx	CSA
9, W	I M2 Ex db I Mb II 2G Ex db IIC T6, T5 Gb II 2D Ex tb IIIC T110/T120/T130 °C Db	Ex db I Mb Ex db IIC T6, T5 Gb Ex tb IIIC T110/T120/T130 °C Db	Class I Groups A, B, C, D, T6, T5 Class I Zone 1 AEx db IIC T6, T5 Gb [US] Ex db IIC T6, T5 Gb [C] Class II Groups E, F, G T110/T120/T130 °C Zone 21 AEx tb IIIC T110/T120/T130 °C Db [US] Ex tb IIIC T110/T120/T130 °C Db [C] Class III Type 4
G	I M2 Ex db I Mb II 2G Ex db IIC T6, T5 Gb II 2D Ex tb IIIC T110 °C Db	Ex db I Mb Ex db IIC T6, T5 Gb Ex tb IIIC T110 °C Db	Class I Groups A, B, C, D, T6, T5 Class I Zone 1 AEx db IIC T6, T5 Gb [US] Ex db IIC T6, T5 Gb [C] Class II Groups E, F, G T110 °C Zone 21 AEx tb IIIC T110°C Db [US] Ex tb IIIC T110 °C Db [C] Class III Type 4
J	II 2G Ex db IIC T6, T5 Gb II 2D Ex tb IIIC T110/T120/T130 °C Db	Ex db IIC T6, T5 Gb Ex tb IIIC T110/T120/T130 °C Db	Class I Groups A, B, C, D, T6, T5 Class I Zone 1 AEx db IIC T6, T5 Gb [US] Ex db IIC T6, T5 Gb [C] Class II Groups E, F, G T110/T120/T130 °C Class III Type 4
Q	II 2G Ex db IIC T6, T5 Gb II 2D Ex tb IIIC T110/T120/T130 °C Db	Ex db IIC T6, T5 Gb Ex tb IIIC T110/T120/T130 °C Db	Class I Groups B, C, D, T6, T5 Class II Groups E, F, G T110/T120/T130 °C Class III

Note

The information in this brochure relates to the operating conditions and applications described.
For applications or operating conditions not described, please contact the relevant technical department.
Subject to technical modifications.

HYDAC ELECTRONIC GMBH
Hauptstraße 27
66128 Saarbrücken/Germany
Telephone +49 (0)6897 509-01
Fax +49 (0)6897 509-1726
E-mail: electronic@hydac.com
Internet: www.hydac.com

Pressure transmitter
HDA 8400 for series applications

Hydrogen, mobile applications
EC 79/2009 type approval

Relative pressure	Accuracy 0.5%

H_2 EC 79

Features

- Specially designed for the measurement of hydrogen
- Parts in contact with the fluid: stainless steel 1.4435 with a Ni content ≥ 13 % (316L)
- EC 79/2009 type approval

Description

The pressure transmitter series HDA 8400 has been specially developed for measuring tasks with hydrogen in mobile applications. The transmitters are based on a robust, long-life sensor cell with a thin-film strain gauge on a stainless steel membrane. The sensor cell is welded to the process connection, there are no internal seals. The compatibility with hydrogen is ensured by using a particular material. All hydrogen-wetted parts are made of stainless steel 1.4435 with a Ni content of ≥ 13 %.

The transmitters are certified according to the regulations EC 79/2009, the type approval for hydrogen-driven vehicles. For optimum adaptation to the respective application, a variety of hydrogen-suited process connections have been implied into the certification.

For integration into modern controls, standard analogue output signals are available, e.g. 4..20 mA, 0.5 .. 4.5 V or 1 .. 5 V. Ratiometric output signals are also availabe. Various mobile suited, integrated connectors and cable solutions are available for the electrical connection.

Application fields

The applications can be found in all hydrogen-driven vehicles, placed on the market in accordance with the regulations EC 79/2009. In fuel cell electric vehicles (FCEV's) such as cars, buses, trucks, etc., pressures are monitored and regulated, starting with the high-pressure storage system up to the entrance of the fuel cell.

Technical details

Input data												
Measuring ranges	bar	16	25	40	60	100	160	250	400	600	900	1000
Nominal working pressure [1]	bar	30	30	50	70	80	125	200	300	400	700	700
Maximum allowable working pressure [1]	bar	37	37	62	87	100	156	250	375	500	875	875
Burst pressure	bar	125	125	200	300	500	800	1250	2000	3000	3000	3000

Mechanical connection (Tightening torque, recommended)	SF250CX20, Autoclave (7/16-20 UNF 2B) (15 Nm for measuring ranges ≤ 600 bar; 20 Nm for measuring ranges > 600 bar) G 1/4 B DIN EN 837 (20 Nm for measuring ranges ≤ 600 bar; 40 Nm for measuring ranges > 600 bar) 9/16-18 UNF 2A, ISO 8434-3 (25 Nm) 7/16-20 UNF 2A, SAE 4 (15 Nm) 3/8-24 UNF 2A (SAE 3) (10 Nm), only for measuring ranges ≤ 600 bar		
Parts in contact with the fluid	Stainless steel	1.4435 (Ni content ≥ 13 %)	
	Seal	G 1/4 B	Copper (Cu-DHP)
		9/16-18 UNF 2A, ISO 8434-3 7/16-20 UNF 2A, SAE 4	Zurcon®22 (Polyurethane)
		3/8-24 UNF 2A, SAE 3	Ecopur

Output data	
Output signal	Various signals e.g.: 4 .. 20 mA, 0 .. 5 V, 0 ..10 V ratiometric 0.5 .. 4.5 V with U_B=5 V DC (10 .. 90 % U_B)
Accuracy acc. to DIN 16086, terminal based	≤ ± 0.5% FS typ. ≤ ± 1% FS max.
Accuracy, B.F.S.L	≤ ± 0.25% FS typ. ≤ ± 0.5% FS max.
Temperature compensation zero point	≤ ± 0.015% FS / °C typ. ≤ ± 0.025% FS / °C max.
Temperature compensation span	≤ ± 0.015% FS / °C typ. ≤ ± 0.025% FS / °C max.
Non-linearity acc. to DIN 16086, terminal based	≤ ± 0.3% FS max.
Hysteresis	≤ ± 0.4% FS max.
Repeatability	≤ ± 0.1% FS
Rise time	≤ 2 ms
Long-term drift	≤ ± 0.3% FS typ. / year

Environmental conditions		
Compensated temperature range		-25 .. +85 °C
Operating temperature range		-40 .. +100 °C
Storage temperature range		-40 .. +100 °C
Fluid temperature range		-40 .. +125 °C
CE mark		EN 61006-6-1 / 2 / 3 / 4
Vibration resistance acc. to DIN EN 60068-2-6 at 5 .. 2000 Hz		≤ 25 g
Shock resistance acc. to DIN EN 60068-2-27		100 g / 6 ms / half-sine 500 g / 1 ms / half-sine
Protection type [2]	acc. to DIN EN 60529 acc. to ISO 20653	IP 67 IP 6K9K

Other data	
Electrical connection [3]	e.g.: M12x1, 4 pole, Metri-Pack series 150, 3 pole; Deutsch DT04-3P, 3 pole
Supply voltage	8 .. 30 V DC 12 .. 30 V DC (0 .. 10 V output signal) 5 V ± 5 % for ratiometric output signal
Residual ripple of supply voltage	≤ 5 %
Current consumption	≤ 25 mA
Life expectancy	> 10 million load cycles (0 .. 100% FS)
Weight	~ 55 g

Note: Reverse polarity protection of the supply voltage, overvoltage, override and short circuit protection are provided.

FS (**F**ull **S**cale) = relative to complete measuring range

B.F.S.L. = **B**est **F**it **S**traight **L**ine

[1] Type approval EC 79/2009 Nr. e1*79/2009*406/2010*0018*02: Independent of the measuring range associated with the output signal, the transmitters are in compliance with the EC 79/2009 type approval up to the pressures mentioned for "nominal working pressure" and "maximum allowable working pressure".

[2] With mounted mating connector in corresponding protection type

[3] Other electrical connections on request

Dimensions

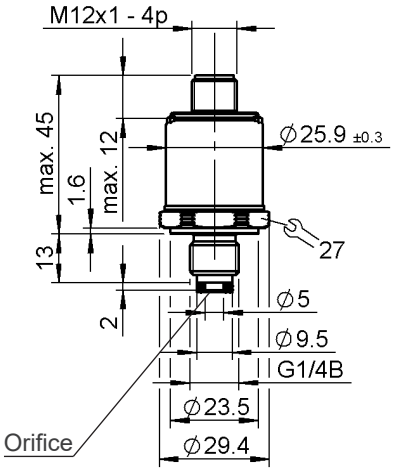

Electrical connection variants

Male connector, Packard Metri-Pack series 150, 3 pole	Male connector, Deutsch DT 04, 3 pole
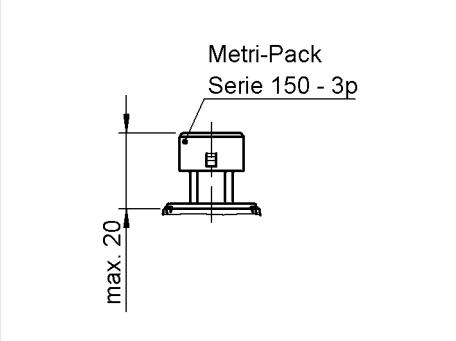	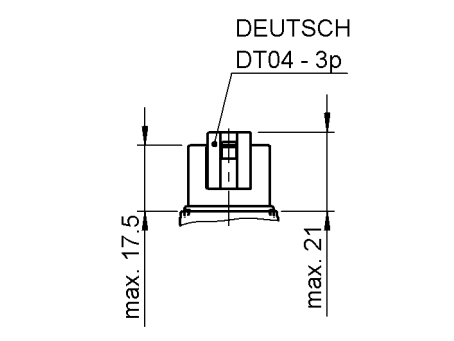
Male connector, AMP Superseal, 3 pole	Male connector, AMP Junior Timer, 3 pole
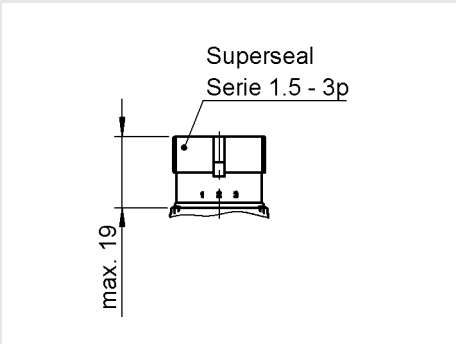	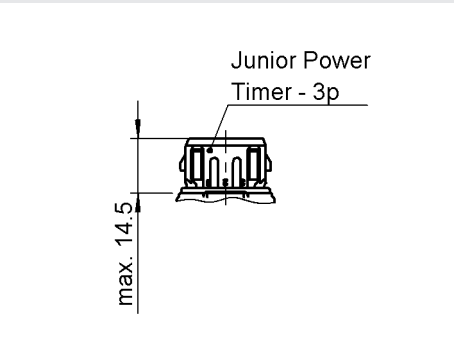

Mechanical connection variants

7/16-20 UNF 2A,
male thread

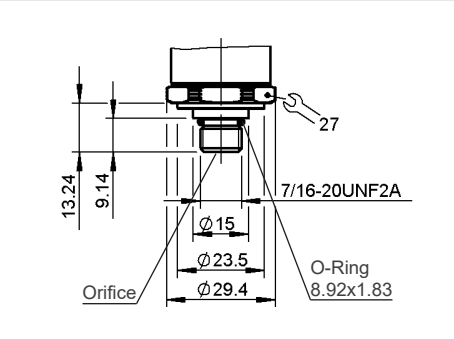

9/16-18 UNF 2A with frontal seal,
male thread

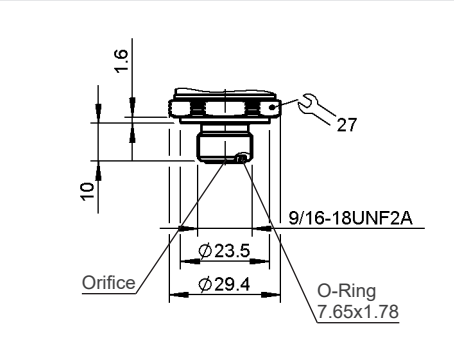

SF250CX20, Autoclave
7/16-20 UNF 2B, female thread

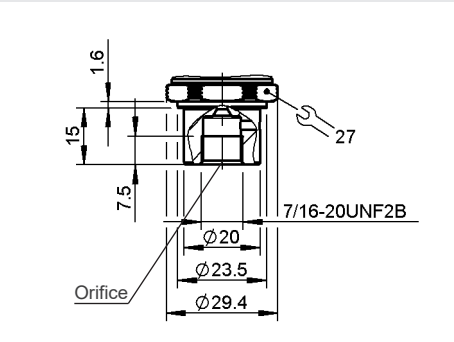

3/8-24 UNF 2A,
male thread

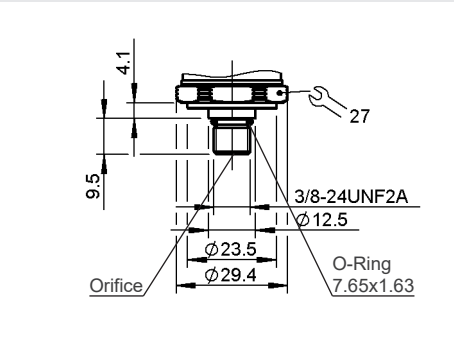

Order details

The pressure transmitter HDA 8400 with type approval EC 79/2009 for hydrogen applications has been especially developed for the use in series applications.
For precise specifications, please contact our HYDAC ELECTRONIC Sales Department.

Note

The information in this brochure relates to the operating conditions and applications described.
For applications or operating conditions not described, please contact the relevant technical department.
Subject to technical modifications.

HYDAC ELECTRONIC GMBH
Hauptstraße 27
66128 Saarbrücken/Germany
Telephone +49 (0)6897 509-01
Fax +49 (0)6897 509-1726
E-mail: electronic@hydac.com
Internet: www.hydac.com

Notes

Accumulator Technology 30.000

Filter Technology 70.000

Control Technology 18.500

Filter Systems 79.000

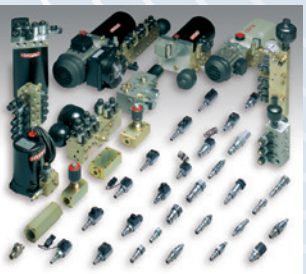

Compact-Hydraulics 53.000

Accessories 61.000

Electronics 180.000

Cooling Systems 57.000

Global Presence.
Local Expertise.
www.hydac.com

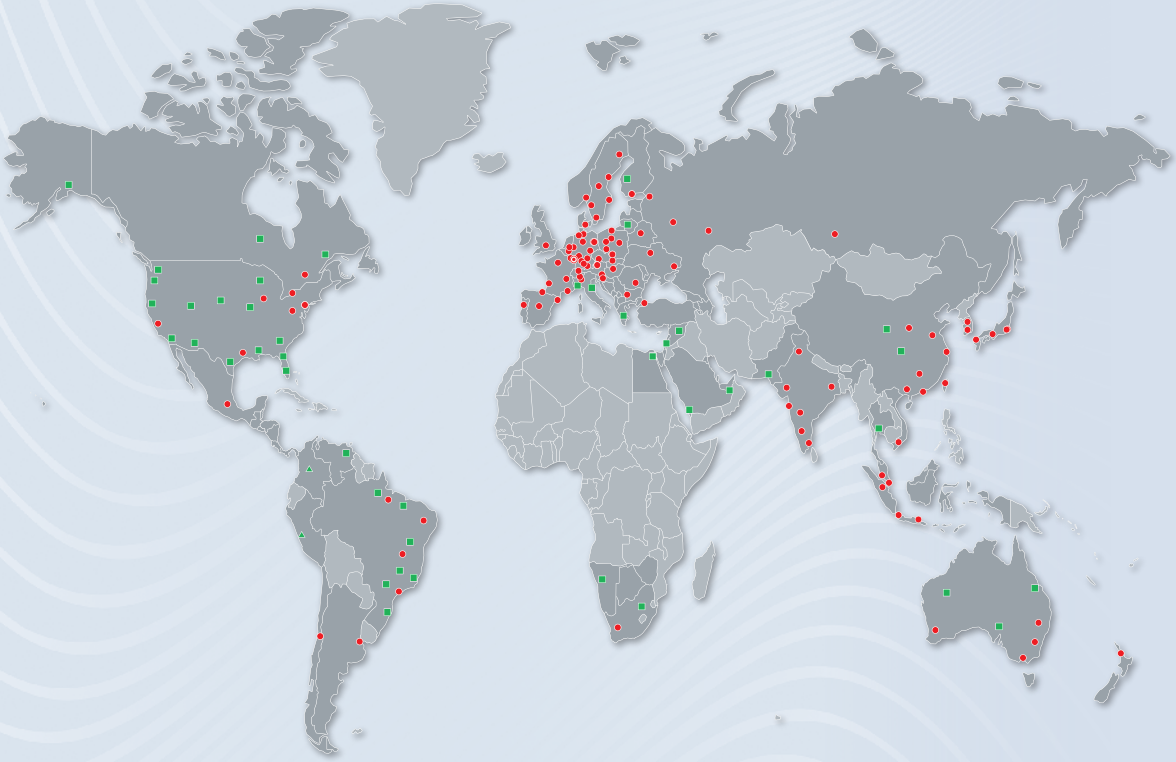

- HYDAC Headquarters
- HYDAC Companies
- HYDAC Sales and Service Partners
- Free Sales Partners

HYDAC INTERNATIONAL

HYDAC ELECTRONIC GMBH

Hauptstraße 27
66128 Saarbrücken
Germany

Tel.: +49 6897 509-01
Fax: +49 6897 509-1726

E-mail: electronic@hydac.com
Internet: www.hydac.com

EN 18.409.0/12.20